Water Treatment Products

speciality chemicals & technical solutions

1594WTP Gravity Feed Dissolver with Timer

Instruction & Operation Manual

Description

The Gravity Feed Dissolver with Timer provides diluted solution of one solid product as demanded by the chosen program. The diluted solution is gravity-fed directly into the tower or boiler.

Site Survey and installation requirements

Before an installation takes place it is advisable to complete a site survey to ensure the Gravity Feed Dissolver with Timer can be installed in a position that meets all of the requirements listed below.

1. Unit must not be installed near areas that suffer excess temperature changes, direct sunlight, frost or precipitation of any kind
2. Water supply – Min 2 Bar – Max 6.2 Bar (200kPa – 620kPa) (29psi – 89.9psi) (If Water pressure exceeds 6 Bar, please install a Pressure Regulator)
3. Ensure the unit can be mounted in an accessible position above the height of the required discharge location.
4. This unit dispenses via gravity and the delivery hose/pipe will require a clear uninterrupted path to the tank
5. The BS EN 60335-1:2002+A2:2006 Standard that this unit conforms to requires protection from back-siphon of non-potable water to the mains supply must be installed to a level relevant to the classification of chemical being used.
6. The floor around the unit must be non-slip or have non-slip matting to avoid slippages
7. The unit must be installed in a well-lit area, or an area that can be lit

Installation

1. Ensure wall is of a quality to support wall anchors, and is flat and is perpendicular to the floor
2. Drill holes for the four wall anchors with a 7mm drill bit, using the mounting board as a template if needed. Make sure the board is level. Hole centre's are 270mm apart horizontal, 370mm apart vertical
3. Connect water supply line 15mm OD tube, to the Push-Fit inlet of unit **(item A)**
4. Connect outlet as required. Barb suits 3/4" ID Flexible Tubing or ½" female BSP connection to hard piping **(item D)**
5. Place chemical bottle securely in solid bowl assembly **(item C)**. See Safety further in document
6. Program Timer **(item B)** to desired times

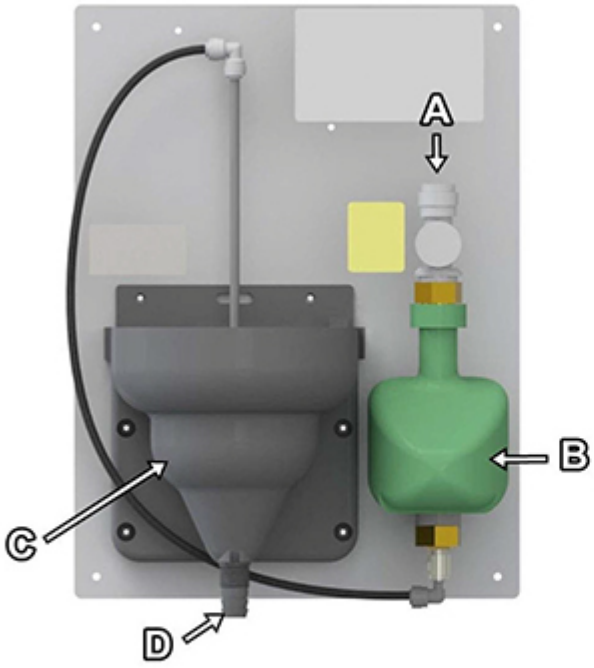

Item	Description
A	Water Inlet
B	Timer
C	Solid Bowl Assembly
D	Solution Outlet

Diagram and Parts List

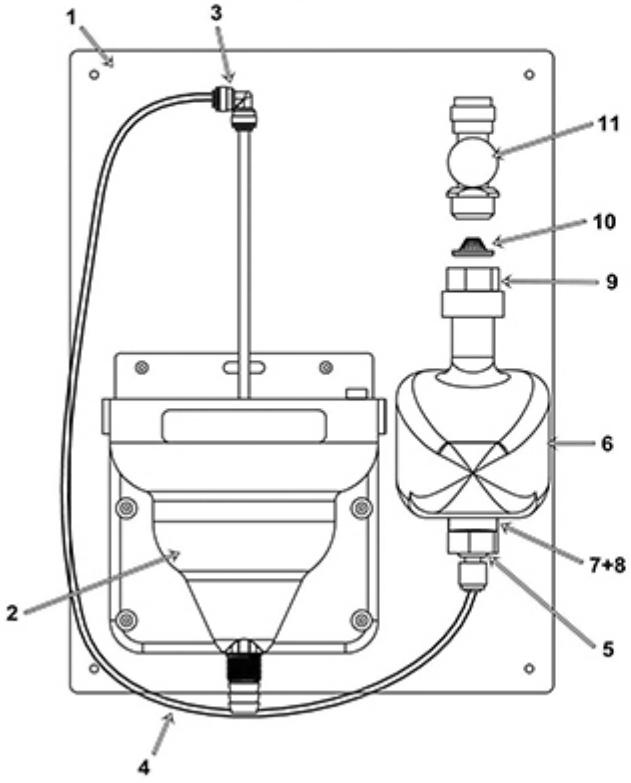

	Description	Part no.
1	Backboard	10095534
2	Solid Dissolver Bowl Assembly	90085176
3	John Guest ¼'' Push In Elbow	90087038
4	¼'' LDPE Tubing	90085160
5	John Guest ¾'' GHT > ¼'' JG Fitting	10091682
6	Timer Unit	10091184
7	Inlet Clamp	10095543
8	Inlet Clamp Spacer	10095544
9	GHT > BSP Adapter	90079258
10	Strainer Washer	238100
11	John Guest 15mm Ball Valve	90090060
N/A	Duracell Procell PP3 Battery	10095539
N/A	Mounting Kit	10072711

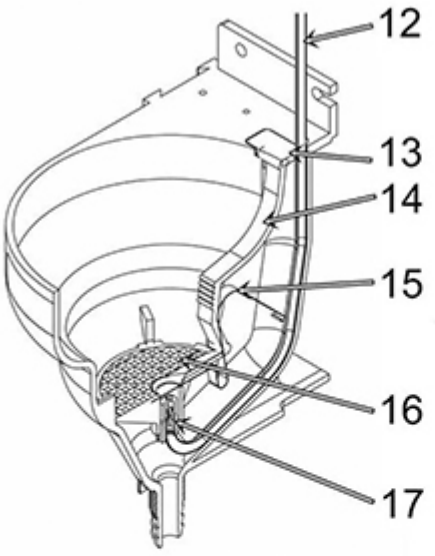

Item	Description	Part no.
12	J Tube	90085174
13	Retainer Arm	90085170
14	Diverter Arm	90085172
15	Diverter Spring	90085171
16	Screen	90085173
17	Blue Nozzle Assembly*	90086204

*As standard the unit is supplied with the Blue -72 OC nozzle, but other nozzle types are available through contacting Water Treatment Products

Timer Instructions

A - Parts List

1. Female swivel
2. Interior filter
3. Top cover
4. Controller display
5. Programming and operation buttons
6. Male hose thread connection
7. Battery compartment

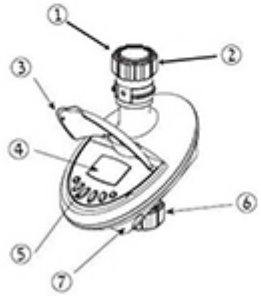

B - Battery Installation

- Remove the battery compartment cover
- Connect 9V battery to the battery connector
- Insert battery and press on battery cover
- Pay attention: when changing the battery, make sure the battery compartment stays dry.

C - Programming

This section contains an example of a weekly program. Simply alter data in the example to adapt the program

The digital controller is programmed with the aid of 4 buttons.

Programming step – used to select the appropriate programming mode (e.g. clock setting mode).

Parameter selection – used to select the parameter to be changed (e.g.hour, minute, etc.) To implement the change, the selected parameter must be blinking.

Data increment (increase) – raises the value of the selected parameter (e.g. adds an hour)

Data decrement (decrease) – lowers the value of the selected parameter (e.g. deducts an hour).

If no changes are implemented, the controller display will always revert to the main screen (clock).
Display digits will stop blinking after 40 seconds.
If the last parameter stops blinking before you have completed your programming, press ⊖ to continue the process.
Emergency Dose : After inserting batteries if no buttons are pressed,the clock will blink continuously. After 10 minutes, the controller will implement 5-minute dose on a 24hr cycle

D - Setting Current Time & Day Of The Week

Setting The Clock

To enable the 1594WTP controller to operate the water system at the required times, the current time and day of the week must be set as shown below:

1. Press ⟲ several times until 🕒 appears.
2. Press ⇨. The hour digits blink. Set the current hour with the aid of ⊕ or ⊖.

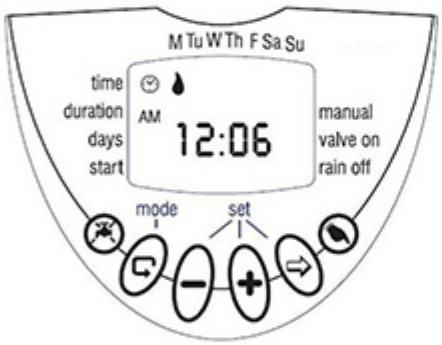

3. Press ⇨.The minute digits blinks. Set the current minute with the aid of ⊕ or ⊖.

E - Setting The Day Of The Week

1. Press ⇳ until a blinking drop appears at the top of the display.
2. Set the drop on the current day of the week by pressing on ⊕ or ⊖.

For a 24 hour clock display, press concurrently on ⊕ and ⊖ buttons once the hour digits stop blinking.
Pressing these buttons again will revert the display back to AM/PM hour display.

F - Programming A Weekly Schedule (Set Days Of The Week)

Let's assume that we want to program the 1594WTP controller to dose three times a day, at 8:00 a.m., 1:00 p.m. and 7:00 p.m., for 10 minutes each time, on Tuesday and Friday.

G - Programming Duration

1. Press ⟲ until ⧗ appears opposite "Duration".The hour digits blink (0)
2. Press on ⊕ or ⊖ to change the watering duration in the example.
3. Press ⇨. The minute digits will blink. Press on ⊕ or ⊖ until the minute digits reach 10.

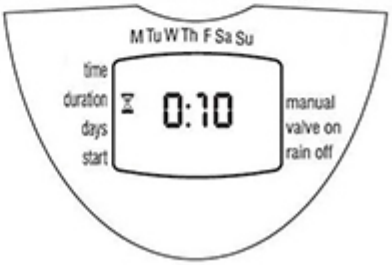

H - Programming Days

1. Press ©. 📄 will appear opposite the word 'Days'. If you are programming the controller for the first time, the word OFF will blink on the display.
2. Press ⇳. 💧 A blinking will appear under Monday in the upper section of the display. Using ⇳, position the blinking marker under Tuesday, and press ⊕. The marker under Tuesday will stop blinking and another marker will start blinking under Wednesday. Press ⇳ twice more until the blinking marker reaches Friday. Press ⊕ again.

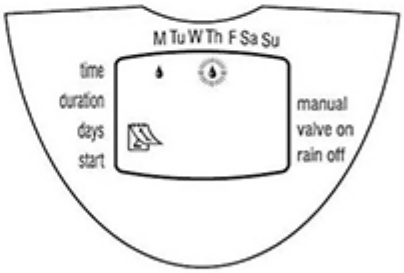

I - Setting Start Time/Date

1. Press ⓒ. STARTI will appear on the display. Press ⓢ. The hour display will start blinking.
2. Using ⊕ or ⊖ set the start time at 08:00 AM (note the AM/PM indicators). Repeat this operation for the second dosing period (START II) at 13:00, and for the third dosing period (START III) at 19:00.
3. Press ⓒ . START IV will appear on the display. Press ⓢ. The hour digits will blink.
4. Press ⊕ or ⊖ until the word OFF appears on the display. The fourth dosing start is canceled.

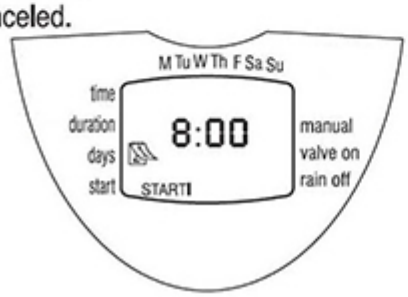

J - Automatic Manual Operation

This option operates the valve for the defined dosing period. The valve will close automatically at the end of the dosing period.
Note that the originally programmed dosing schedule will continue to function at the set times. This setting cannot be implemented when the display is blinking.

Operation: Press ⓜ. 💧 will appear next to the word 'Manual', and 🚰 will appear underneath it.

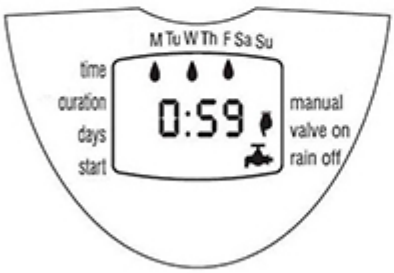

K - Programmed Controller Suspension

This option is used to temporarily suspend dosing controller operation
The dosing operation schedule remains in the controller memory but is not implemented until the suspension is canceled.
Suspension: Press 🦗 for 3 consecutive seconds until the symbol 🦗 appears.
Cancel Suspension: Press 🦗 for 3 consecutive seconds to return dosing system control to the dosing controller. The 🦗 symbol will disappear.
During suspension, the "Manual" ⓜ button will not function.

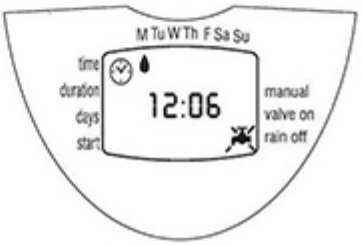

L - Low Battery Warning

A blinking battery icon (🔋) appears on the display when the batteries are low. At this point, the battery still contains a limited amount of energy for valve operation. The battery should be replaced promptly.
If the battery is not replaced, the irrigation controller will continue to open the valve 8 times according to the program. It will then suspend the program and OFF will appear on the screen. Program data will be retained for 30 seconds while changing battery.

M - Missing Defintion In Program

noPr will appear when programming dosing days (see F - Programming a weekly Schedule), if no dosing days have been specified. in this case, the valve cannot be opened during the computerized manual operation

(See Automatic Manual Operation)

N - Maintenance

Remove batteries if the dosing controller will not be used for a prolonged period. The controller contains an internal filter, which has to be removed and cleaned every few months. If the filter is not cleaned on a regular basis - it could create problems. The life span of the battery is at least one year.

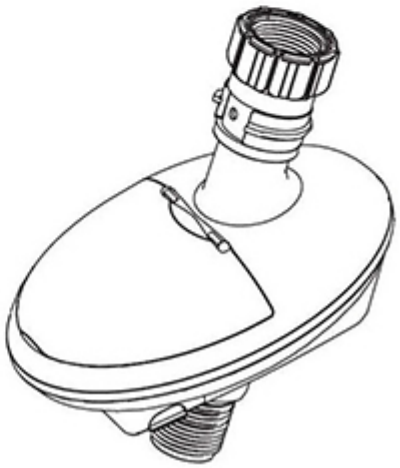

Technical Specification

Item Number	1594WTP
Description	Gravity Feed Dissolver with Timer
Dimensions	400mm H X 300mm W X 250mm D
Weight	4.5kg
Operating Voltage	9 VDC
Operating Current	45 mA
Water pressure	Min 1.8 Bar – Max 6 Bar (176kPa – 586kPa)

This product is not suitable for use with Chlorine containing products.
For Chlorine containing products, please contact Water Treatment Products

This product is to be supplied with clean water, at a temperature of up to 60°C. For advice on using other chemicals as the dilution liquid, please contact Water Treatment Products for compatibility

Changing Chemical Bottle

When the solid chemical is exhausted, the bottle must be changed.
Refer to the 'Safety section of this manual for clothing and chemical handling instructions

1. Turn off power supply to the Solenoid
2. Turn off water supply to the unit
3. Lift chemical bottle out of bowl
4. Insert new chemical into bowl
5. Reconnect power and water supply

Troubleshooting chart

Warning

- **Before carrying out any maintenance or cleaning you must disconnect water and power supplies from unit**
- **Do not adjust / rework items not listed in troubleshooting guide below without guidance of Water Treatment Products**

Problem	Cause	Solution
1. No /Reduced output	a) Timer Closed b) Strainer Washer Blocked c) Timer Faulty d) Water supply off e) Battery Low	a) Check Timer Programming b) Unscrew and clean / replace Strainer Washer c) Replace Timer d) Ensure mains water flowing e) Check timer battery and replace
2. Chemical dilution weak / strong	a) Incoming water pressure b) Nozzle Blocked	a) Ensure mains water pressure is between values listed in product specification b) Remove and clean nozzle found in chemical bowl

Waste Electrical and Electronic Equipment (WEEE)

WEEE Regulations apply to companies who Manufacture & Distribute electrical or electronic equipment

WEEE Classification – 10. Automatic dispensers.

The WEEE Regulations apply to importers, producers, retailers and users of EEE, and to businesses that treat or recover WEEE. The 593GB unit is a product placed onto market POST 13.08.05, therefore called 'future WEEE'.

As a producer Water Treatment Products have the option to take responsibility for the EEE placed on the market. If Water Treatment Products chooses to receive WEEE they must make sure that it is disposed of in an environmentally sound way, including the treatment, reuse, recovery and recycling of the components where appropriate.

Responsibility as a producer of EEE

Water Treatment Products as a producer of EEE is registered with a producer compliance scheme who registers them with the relevant environmental regulator. Through the regulator they become part of an approved producer compliance scheme (PCS).

The PCS supply a unique and permanent producer registration number.

If disposal is outsourced it (the product) must be taken to an appropriately licensed site (approved authorised treatment facility - AATF) where it can be treated safely.

The environmental impacts of the substances in EEE and waste electrical and electronic equipment (WEEE)

The main environmental concerns in the EEE sector stem from soil and water contamination, resource depletion, energy use and waste. At the production stage, obtaining raw material for EEE production consumes a large amount of energy, especially the process of extracting resources, which can also lead to degradation of the surrounding environment.

For instance, when raw material is shipped to a plant, it goes through a complex, high energy-consuming process as it is converted into a finished product. Moreover, as demand for fuel and raw materials increases with the increase in exports, the environmental impact of these factors is also likely to increase.

The reasons for separating WEEE from other waste

Failing to separate waste properly can be very expensive as the majority of discarded products are shredded into small pieces of material and re-sold as raw material – much of which ends up in the Far East and goes back into manufacturing. If the hazardous components were not separated first the entire batch could be contaminated. This significantly increases the risk of environmental damage and could lead to legal action under hazardous waste regulations.

The meaning of the crossed out wheeled bin symbol

The crossed out wheeled bin symbol is not intended to indicate to you that WEEE is banned from being disposed of as general waste. Moreover, the intention behind the symbol is that, when coupled with information supplied by distributors as to the availability of recycling facilities, you will be reminded that these facilities exist.

How they can safely dispose of WEEE for proper treatment

When the product is at its end of life, either contact the Local Authority in charge of electrical disposal, or contact Water Treatment Products who will either take the item back from yourself or supply you with relevant information for a local WEEE treatment facility. If asked, Water Treatment Products must provide yourself business with:

- Contact information for the EEE producer within Water Treatment Products. The producer's compliance scheme is responsible for the end-of-life handling of EEE.
- Records that will help producers to supply their producer compliance scheme with accurate information, for example numbers of sales of EEE to non-household users.

Water Treatment Products Ltd
Unit 1
Gilchrist Thomas Industrial Estate
Blaenavon
Pontypool
Torfaen NP4 9RL

As a distributor Water Treatment Products have no legal obligation to take back WEEE from business users

The Batteries and Accumulators Regulations 2008 (BERR)

Contents

1. **Battery Definition**
2. **Material Prohibitions**
3. **Labeling to aid recycling**
4. **Removal of batteries at end of life**
5. **Capacity Labeling / Materials Declarations / Materials Analysis / Due Diligence**

Fig. 1

Detail

1. Battery Definition

The battery(s) contained in the accessory kit are classed as 'Portable Batteries'

2. Material Prohibitions

The battery(s) contained in the accessory kit are Alkaline-Manganese Dioxide; this does not fall under the material prohibition regulations contained within the BERR guidelines.

3. Labelling to aid recycling

The battery(s) contained in the accessory kit are pre-labeled with the BERR 'Crossed out Wheelie Bin' Logo (See Fig. 1), indicating that disposal of the batteries must be in line with EU regulations, through returning the battery to either

- Local authority battery collection scheme
- Retailer of electrical batteries exceeding sales weigh of 48kg of battery

4. Removal of Batteries at end of life

- The appliance is designed in such a way that a waste battery can be readily removed from it, by a trained service engineer.

- The instruction manual defines instructions showing how the battery can be removed safely, this must only be done by a trained service engineer

5. Capacity Labelling / Materials Declarations / Materials Analysis / Due Diligence

- The capacity of the battery(s) is indicated in a visible, legible and indelible form

- The advised battery(s) are **Duracell Pro-Cell MN1604 PP3** Battery; this is the advised battery to use, due to the longevity and material suitability. The information on this battery is available from Duracell Website

Replacing the Batteries

Warning

Before changing battery you must disconnect water supplies from unit and wear appropriate PPE

1. Turn off the water supply to the unit
2. Remove the battery cover to gain access to the battery housing.
   a. This is located underneath the timer unit
3. Remove the battery
4. Replace the battery with 1 x Duracell Pro-Cell MN1604 PP3 Battery
5. Slide the battery back into position.
6. Replace the battery cover.
7. Re-set the time on clock (local time) and any programs that may have been lost

Safety

- Please use this equipment carefully and observe all warnings and cautions.
- Wear PPE when dispensing chemicals or other materials or when working in the vicinity of all chemicals, filling or emptying equipment.

- Always observe safety and handling instructions of the chemical manufacturers.
- Always direct discharge away from you or other persons or into approved containers.
- Always dispense cleaners and chemicals in accordance with manufacturer's instructions.
- Always exercise caution when maintaining your equipment.
- Always re-assemble equipment according to instruction procedures. Be sure all components are firmly screwed or latched into position.
- Keep equipment clean to maintain proper operation.
- You must follow all precautions as advised on the product safety data sheet
- Unit should not be tested without chemical bowl installed

Water Treatment Products Ltd
Unit 1
Gilchrist Thomas Industrial Estate
Blaenavon
Pontypool
Torfaen NP4 9RL

www.watertreatmentproducts.co.uk